AERONAUTICAL COMMUNICATIONS PANEL(ACP)
WORKING GROUP N - NETWORKING
SUBGROUP N1 – Internet Communications Services

8th Meeting
Copenhagen, Denmark May 15-19, 2006

Working Paper

Aircraft Mobility using a combination of Internet Standards

This is an informational paper that describes a possible mobility solution using multiple Internet Protocol standards. The paper build on concepts described in ACP/WG N/SG N1 WP705 by Christian Kaas-Petersen of Ericsson. The WP was prepared by William Ivancic of NASA Glenn Research Center

Working paper ACP/WG N/SG N1 WP705 [1] describes the use of the two Internet standard routing protocols Open Shortest Path First (OSPF) [2] and Border Gateway Protocol (BGP) [3] to perform the equivalent routing functions of the current Aeronautical Telecommunication Protocol (ATN) using the modified Inter Domain Routing Protocol (IDRP) [4]. The ATN solution is shown in figure 1 while the OSPF/BGP solution is illustrated in figure 2. The problem with these approaches is that one has to "effectively own"[1] the entire infrastructure. This is necessary as the mobility solution requires injecting routes directly into the infrastructure. Also, the routing solution requires the network to be relatively small in order for routes to propagate in a timely manner.

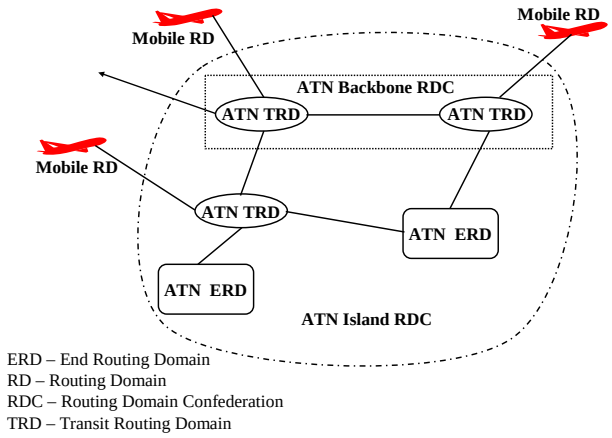

Figure 1 - ATN Routing Network

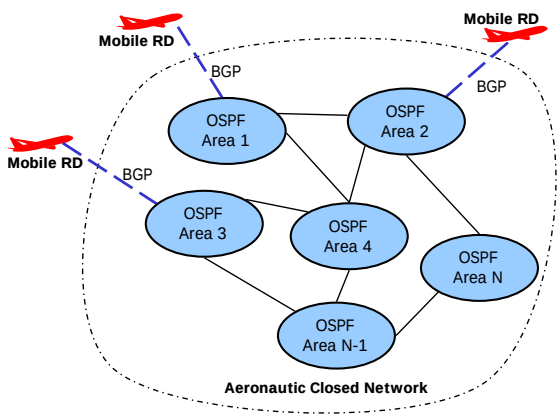

Figure 2 - BGP/OSPF Proposed Solution

[1] "Effectively Own" means the network is entirely under the control of the aeronautics community via lease, or own outright and is entirely closed.

The working paper 705 proposal proposes the following to obtain aircraft mobility in a much simpler approach than using BGP only or IDRP. Let the entire ground network be one routing domain running OSPF. It should be possible to define a suitable hierarchical address plan, and then divide the entire routing domain in some OSPF areas, one OSPF area for each part of the hierarchy. Still BGP will be used between the ground and the aircraft, but on the ground the prefix will be injected in OSPF as externally learned routes. This has several benefits: externally learned prefixes are spread in the entire domain, and each external prefix is spread separately. The spreading is fast, less than 1 second per hop, and because the prefix is spread allover, no special policies have to be configured. Because the aircraft prefixes are spread as external information the OSPF routers have very little work to do to update its routing table.

It is highly desirable to take advantage of other's infrastructures and future communication technology by securely utilizing the open Internet. Use of Internet Engineering Task Force (IETF) open standard for mobility such as Network Mobility (nemo) [5] and Mobile Nodes and Multiple Interfaces in IPv6 (monami6) [6] may enable one to enhance the BGP/OSPF solution. Nemo utilizes mobile-IP techniques and does require one to inject routes into someone else's infrastructure. Monami6 enables policy-based routing on specified links.

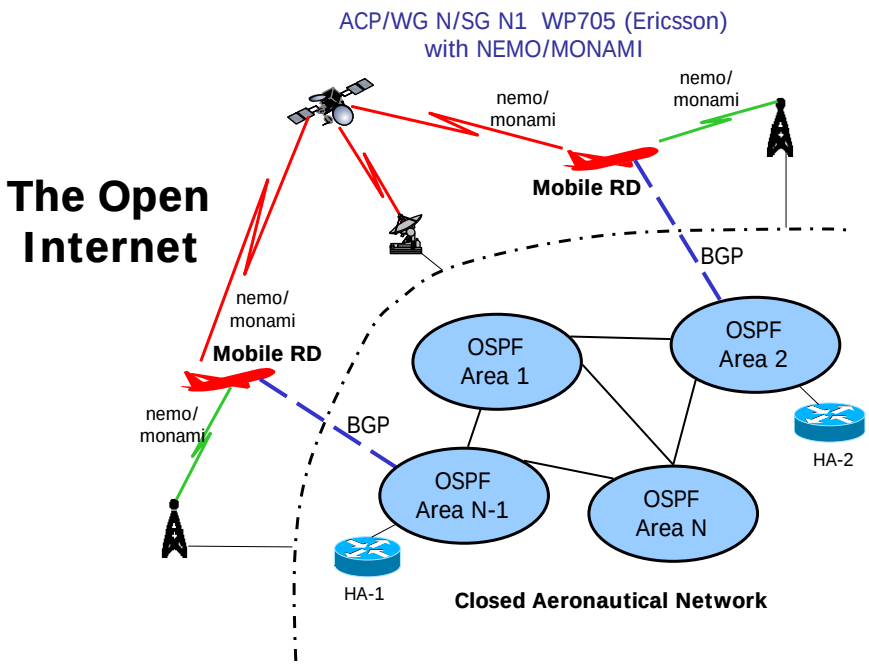

Figure 3 - BGP/OSPF/NEMO Architecture

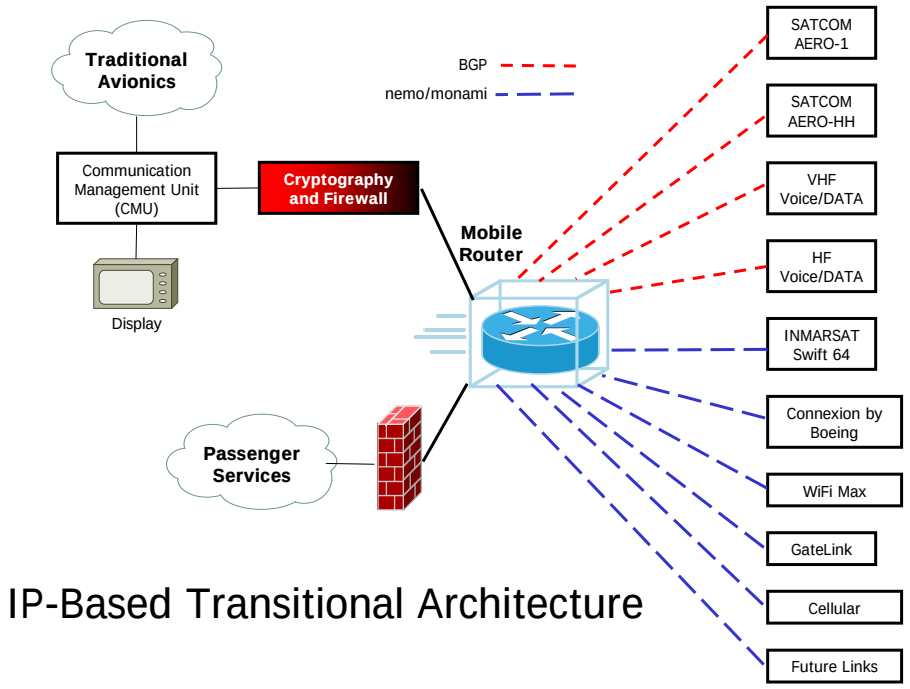

Figure 4 - Flight Avionics

Figures 3 and 4 illustrate the BGP/OSPF/NEMO concept. It is currently assumed, but not proven, that the IDRP or BGP/OSPF solutions are more reliable and converge faster than a nemo solution and provides for route optimization. Thus, by combining a BGP/OSPF solution with a nemo solution, one may be able to obtain the best of both worlds. Here, ATM traffic would normally utilize the VHF links using BGP. Other traffic could be sent over whatever links are appropriate.

If for some reason, the VHF link were to fail and other links where available, ATM traffic could take those other links. Monami6's policy-based capabilities make this possible. Figure 5 depicts such a situation. Here, policy can state that ATM traffic normally is passed over the "reliable link" with highest priority. Air Operations Communications (AOC) traffic can be designated for some other less reliable link. Note, current mode of operations is to have ATM and AOC transmitted over the same link with ATM having priority over AOC. Other traffic can pass through the en

Figure 5 illustrate the advantages of policy-based routing in a mobile network. Consider the mobile network having three links available. One link has been classified as highly reliable but relatively low rate. This link is reserved for command and control. The second link is a low

latency, low bandwidth link. The third link is high-rate for passenger services[2]. Assume policy is set with the following rules:

(1) Only ATC traffic is allowed to use the reliable link.

(2) Data precedence is set such that ATC is highest priority, AOC is next highest and passenger traffic has lowest priority.

(3) ATC and AOC traffic are allowed to use the low-latency link

(4) ATC, AOC and passenger traffic are allowed to use the high-rate link.

(5) Link preference for ATC is reliable link – highest, low-latency link – middle, high-rate – last.

(6) Link preference for AOC is low-latency followed by high-rate.

Figure 5 shows that ATC and AOC traffic have precedence over passenger traffic and could use the high-rate link if their preferred links are unavailable. Furthermore, one could conceivably make this the preferred link for all traffic if safety-of-flight QoS requirements could be met. Doing so would release spectrum to ATC and AOC as many users could be using the high-rate links when available [7].

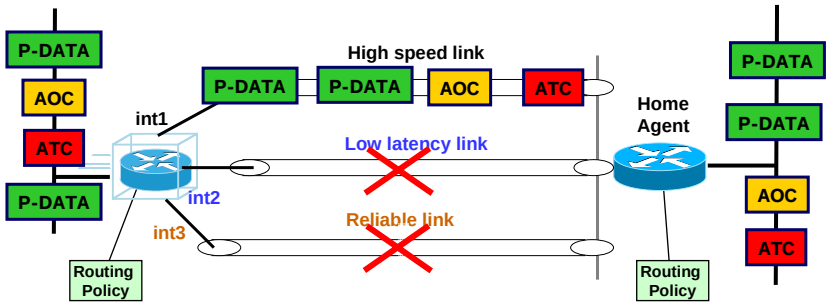

Figure 5 - Policy-Based Routing with Passengers Link Active

[2] The passenger link may be classified as secondary, but being a money generating link with the potential for real-time, directed advertising riding on this link, the availability will likely be as good or better than other links.

The proposed BGP/OSPF/NEMO solution should be considered for experimental development as it offers the following advantages:

- Allows one to investigate if BGP/OSPF is a reasonable alternative to IDRP
- Allows one to incorporate nemo and monami which enables sharing of network infrastructure thereby having a potential to reduce costs, increase reliability (the more links the better), take advantage of new communication technologies and they arise, have competition between service providers.
- Allows one to determine if safety-of-flight requirement can be met with nemo/monami technology via deployment in an operational setting as one could easily revert back to know acceptable proven operations. If so, one may be able to free up bandwidth by off-loading much of the ATM and AOC traffic that currently utilized the VHF links.

References:

[1] Christian Kaas-Petersen: "Aircraft Mobility," ACP/WG N/SG N1 WP705, March 2006
[2] Open Shortest Path First IGP (ospf) http://www.ietf.org/html.charters/ospf-charter.html
[3] RFC1771, "A Border Gateway Protocol 4 (BGP-4)" March 1995
[4] ISO/IEC 10747:1993 Information Technology - Telecommunication and Information Exchange Between Systems - Protocol for Exchange of Inter-Domain Routing Information among Intermediate Systems to Support Forwarding of ISO 8473 PDUs (IDRP)
[5] Network Mobility (nemo) http://www.ietf.org/html.charters/nemo-charter.html
[6] Mobile Nodes and Multiple Interfaces in IPv6 (monami6) http://www.ietf.org/html.charters/monami6-charter.html
[7] W. Ivancic, "Modular, Cost-Effective, Extensible Avionics Architecture for Secure, Mobile Communications," IEEE 2006 Aerospace Conference, Big Sky, Montana, Paper 4.1810, March 2006,